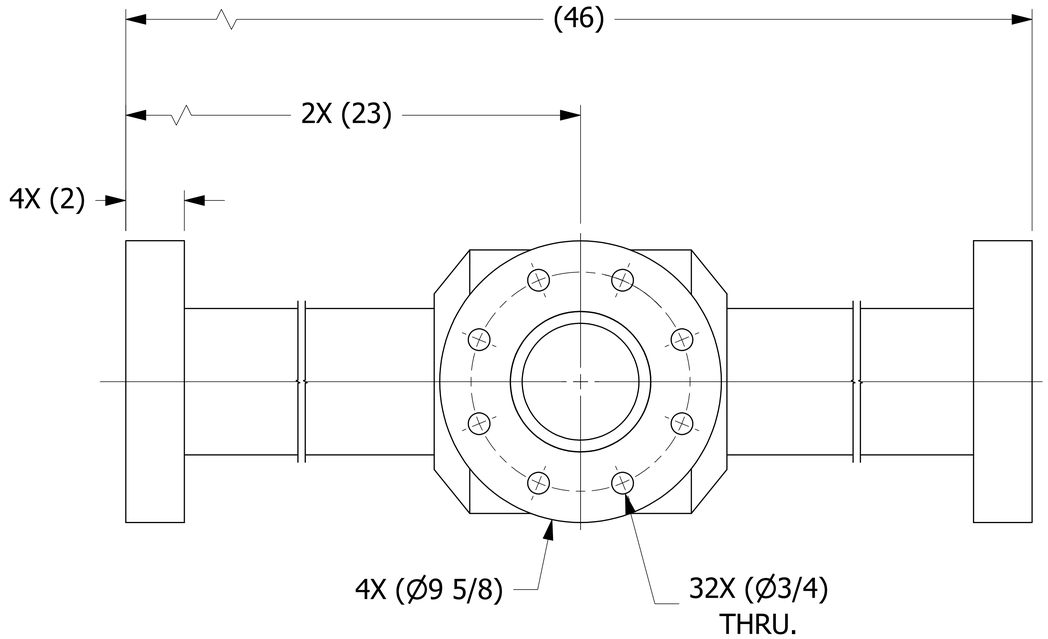

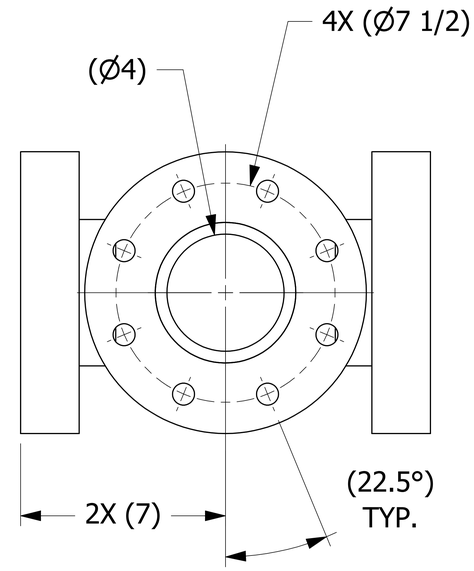

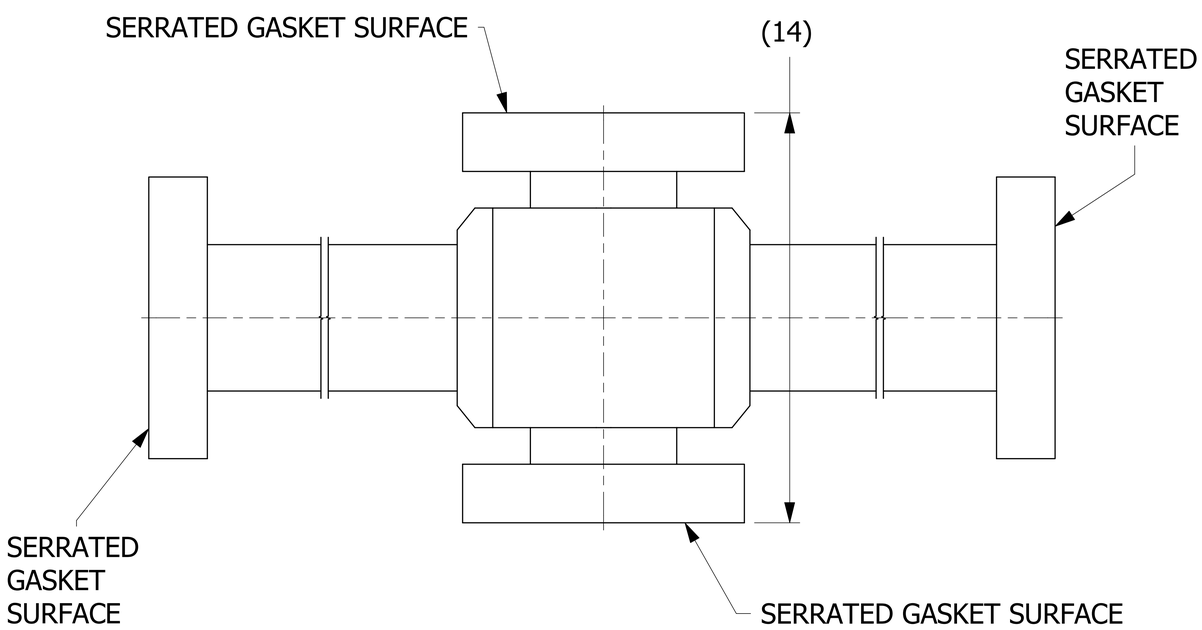

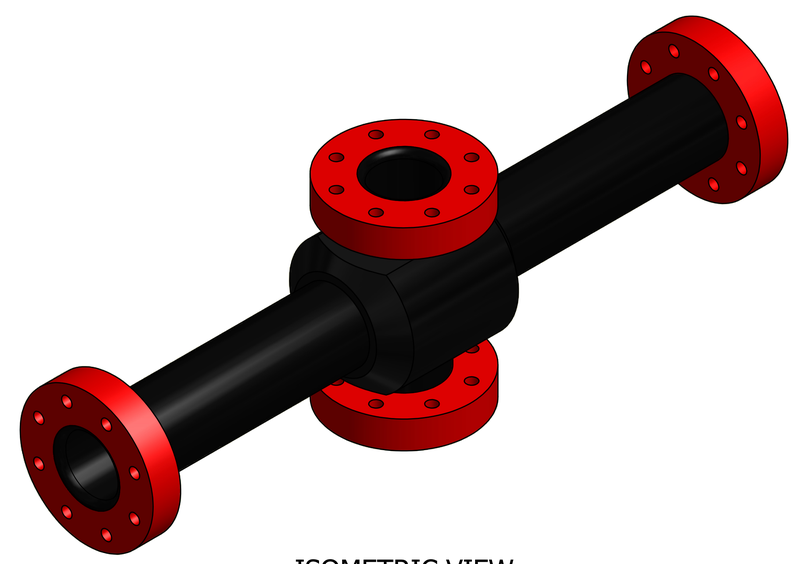

ISOMETRIC VIEW

SALES DRAWING SALES DRAWING

SALES DRAWING SALES DRAWING

NOTE:
SOLD TO WORLEY WELDING ONLY.

REV	BY	DATE	DESCRIPTION
C	TAK	8-29-17	ADDED DSS 3 NOTE, REPLACED QAP5F-1 W/ QAP5A-1
B	GDS	7-28-11	ADDED MARKING PRESSURE NOTE
A	REH	9-29-10	ADDED PART TO SYSTEM

UNLESS OTHERWISE SPECIFIED
DIMENSIONAL TOLERANCES
FRACTIONAL: ±1/16
X.XX: ±.03
X.XXX: ±.015
ANGULAR: ±1°
DEBURR ALL SHARP EDGES.
ALL MACHINED SURFACES TO HAVE A 125 RMS FINISH UNLESS NOTED OTHERWISE.
THIRD ANGLE PROJECTION

DRAWN BY:	REH
CHECKED BY:	VD
PROTOTYPE BY:	REH
PROTOTYPE DATE:	8/27/2010
APPROVED FOR PRODUCTION BY:	VD
PRODUCTION DATE:	9/29/2010

SALCO PRODUCTS, INC.

PART NAME: PIPE CROSS 4"

MATERIAL: SALCO PE

PROJECT #: WAG0870 | SHEET #: 1 OF 1 | SCALE: 1:1

DRAWING #: E29348 | PART #: HS4PC454614

THIS PRINT, PROPERTY OF SALCO PRODUCTS INC, CONTAINS PROPRIETARY INFORMATION AND MUST NOT BE COPIED, REPRODUCED, OR USED DETRIMENTALLY TO OUR INTEREST.